CCK2130,1,2,3,5,7BEX
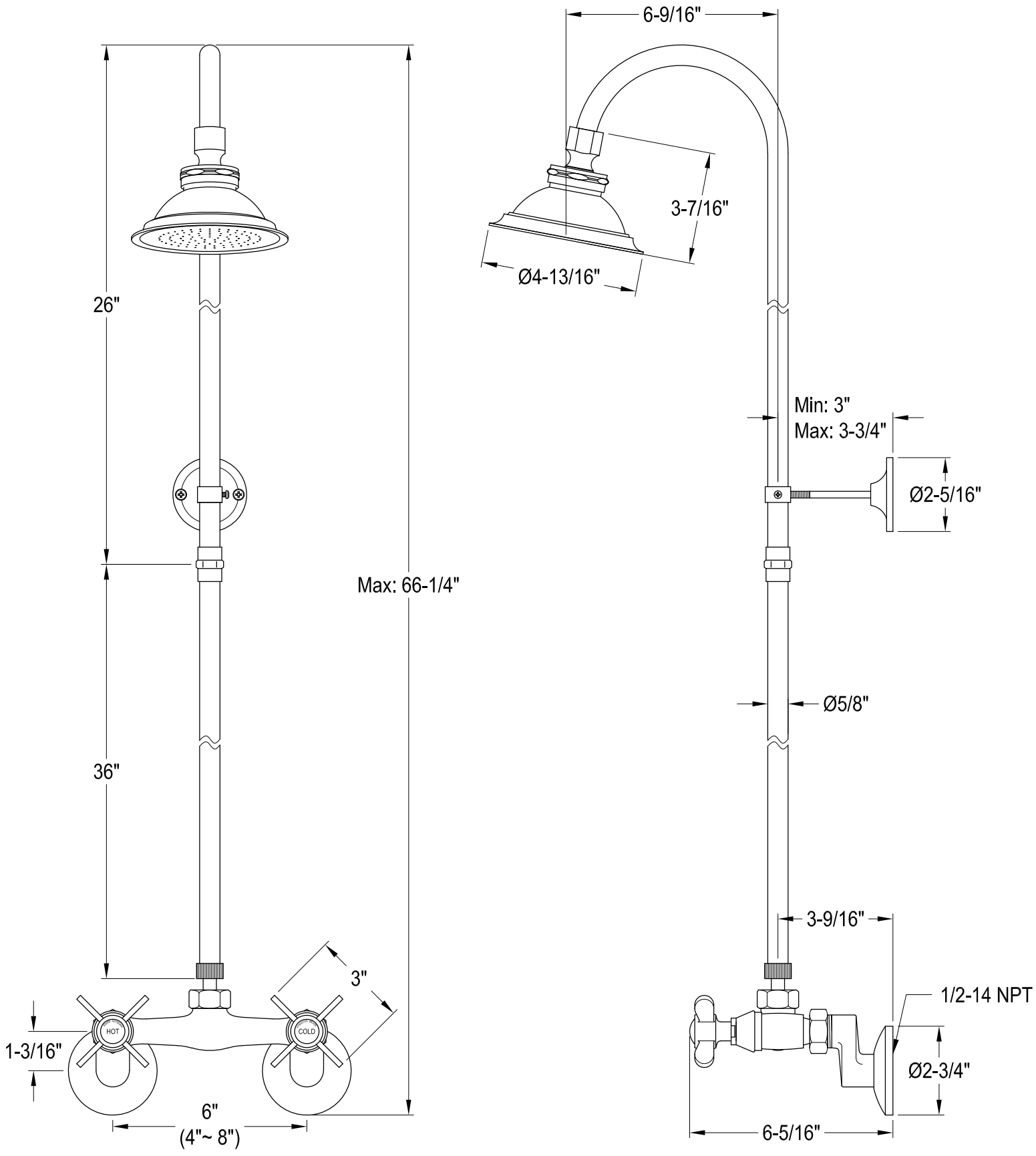
Shower Combo